HELIS

CAST ALUMINIUM BRACKET

TECHNICAL CHARACTERISTICS

Material: Aluminum EN1706 AC-42000S
Fixture Mounting: top Ø2.38'' & suspended (1'' BSPT F)
Mounting for pole: with Ø3.00'' OD

DIMENSIONS(inches)

	1 light		2 lights	
	A	B	A	B
HELIS 90	35"	31"	71"	31"

ORDERING INFORMATION
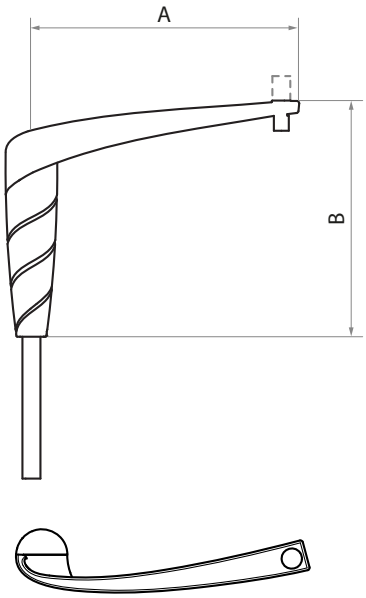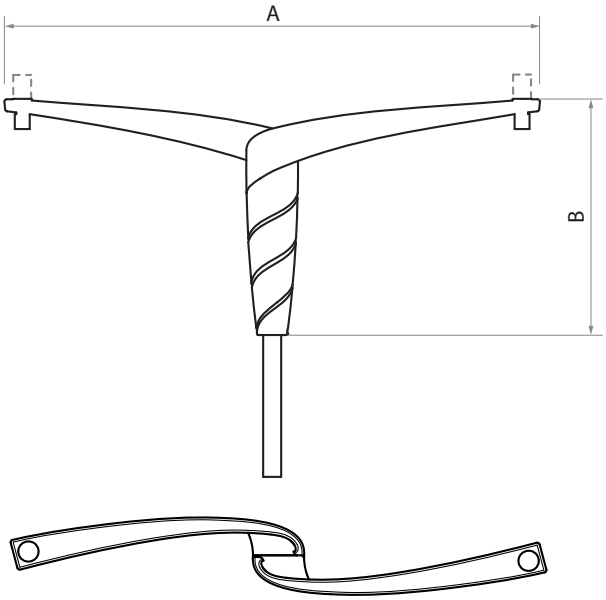
MODEL	SIZE	#FIXTURES	MOUNTING	FINISH
HEL *HELIS ARM*	**90**	**1** **2**	**PT-2** *FIXTURE TOP MOUNTED* **SUS** *FIXTURE SUSPENDED*	**BLK** *BLACK* **BRZ** *BRONZE* **SLV** *SILVER* **WHT** *WHITE* **RAL#** *CUSTOM RAL*