ARO

MACHINE-WELDED BRACKET

TECHNICAL CHARACTERISTICS

Material: Galvanized steel
Luminaire mounting: Lateral
Bracket mounting: for pole with Ø3.00" OD
Decorative accessories: DecoLED or DecoSpike
Optional: Irys back light attachment

DIMENSIONS

	1 light		2 lights	
	A	B	A	B
ARO 70	2'	6"	5'	6"
ARO 100	3'	6"	7'	6"

ORDERING INFORMATION
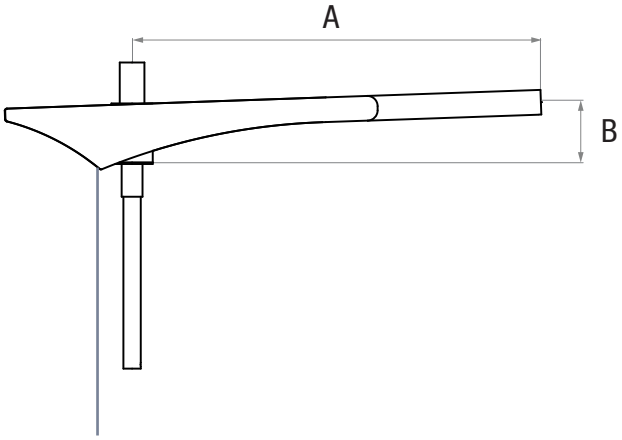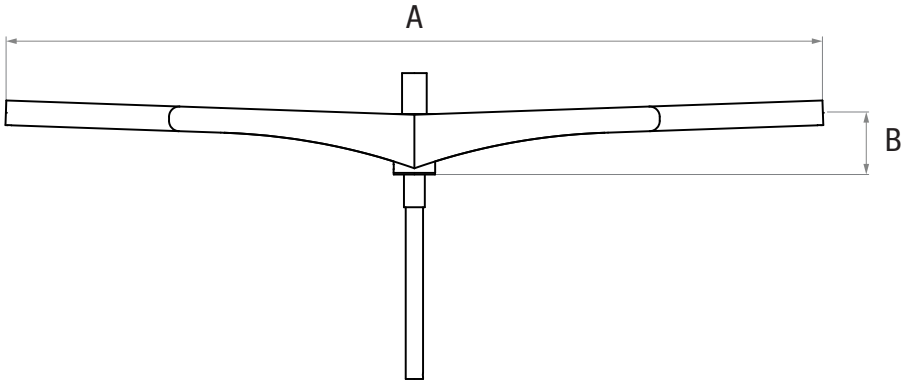
MODEL	SIZE	#FIXTURES	MOUNTING	OPTIONS	FINISH
ARO *ARO ARM*	**70** **100**	**1** **2**	**PT-3** *POLE TOP WITH 3.00" OD* **OTHER OPTIONS AVAILABLE*	**DCL** *DECOLED-COLOR* **DCS** *DECOSPIKE* **IRYS** *IRYS-CAT#*	**BLK** *BLACK* **BRZ** *BRONZE* **SLV** *SILVER* **WHT** *WHITE* **RAL#** *CUSTOM RAL COLOR*