# ST ANDRÉ

## MACHINE-WELDED BRACKET

### TECHNICAL CHARACTERISTICS

Material: Galvanized steel

Fixture Mounting: Suspended (1” BSPT F)

Bracket mounting: For pole with Ø3.00'' OD or wall/surface mounting

Decorative accessory: DecoLED or DecoSpike



ORDERING INFORMATION

| MODEL | SIZE | #FIXTURES | MOUNTING | OPTIONS | FINISH |
|---|---|---|---|---|---|
| **STA**<br>*ST ANDRE ARM* | **70**<br>**100** | **1**<br>**2** | **PT-1**<br>*POLE TOP WITH 3.00" OD*<br>**OTHER OPTIONS AVAILABLE*<br>**PT-2**<br>*th[9¢ht ²⌊¢I oфллђ h5*<br>*ƒh¢I9w ht¢Lhb{ !±!⌊[! . [9*<br>**PT-3**<br>*th[9¢ht ²⌊¢I oфллђ h5*<br>*ƒh¢I9w ht¢Lhb{ !±!⌊[! . [9*<br>**WM**<br>*WALL/ SURFACE MOUNTING* | **DCL**<br>*DECOLED-COLOR*<br>**DCS**<br>*DECOSPIKE* | **BLK**<br>*BLACK*<br>**BRZ**<br>*BRONZE*<br>**SLV**<br>*SILVER*<br>**WHT**<br>*WHITE*<br>**RAL#**<br>*CUSTOM RAL* |

DIMENSIONS (inches) for pole (PT-1)

| | 1 Light | | | |
|---|---|---|---|---|
| | A | B | A | B |
| **ST ANDRÉ 70** | 28" | 31" | 53" | 31" |
| **ST ANDRÉ 100** | 41" | 31" | 81" | 31" |

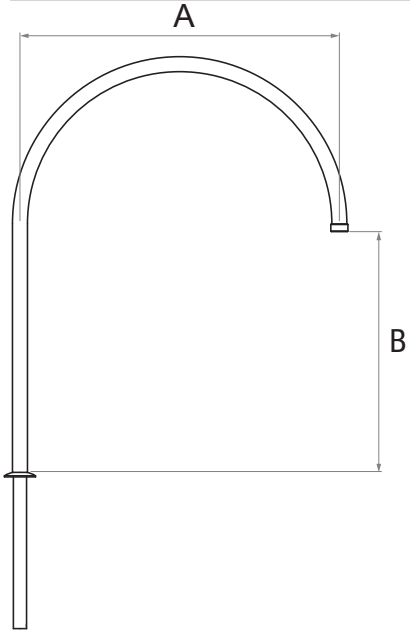


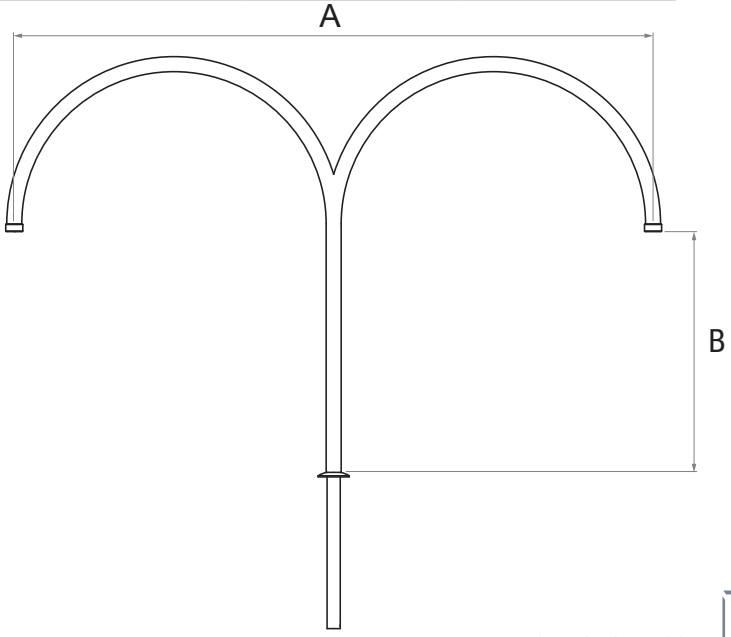

DIMENSIONS (inches)
welded elevated (PT-2)

| | 1 Light | | 2 Lights | |
|---|---|---|---|---|
| | A | B | A | B |
| **ST ANDRÉ 70** | 35" | 18" | 69" | 18" |
| **ST ANDRÉ 100** | 44" | 18" | 89" | 18" |

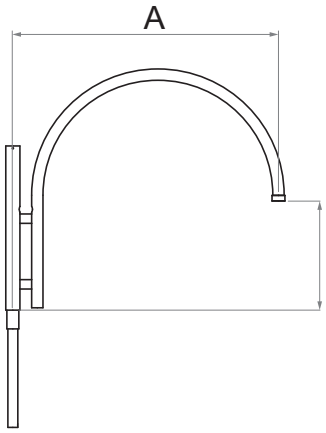


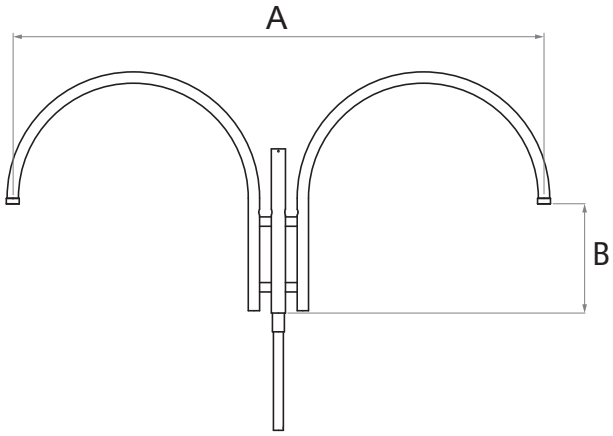


DIMENSIONS (inches)
elevated with a ring
(PT-3)

| | 1 Light | | 2 Lights | |
|---|---|---|---|---|
| | A | B | A | B |
| **ST ANDRÉ 70** | 35" | 37" | 70" | 37" |
| **ST ANDRÉ 100** | 44" | 37" | 89" | 37" |

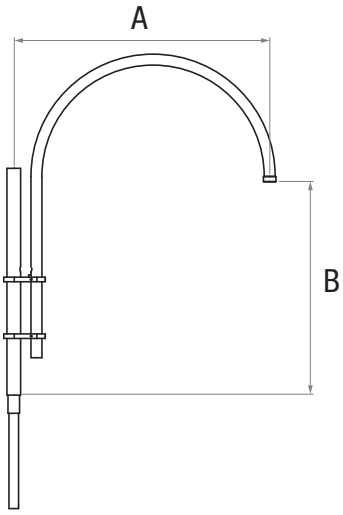


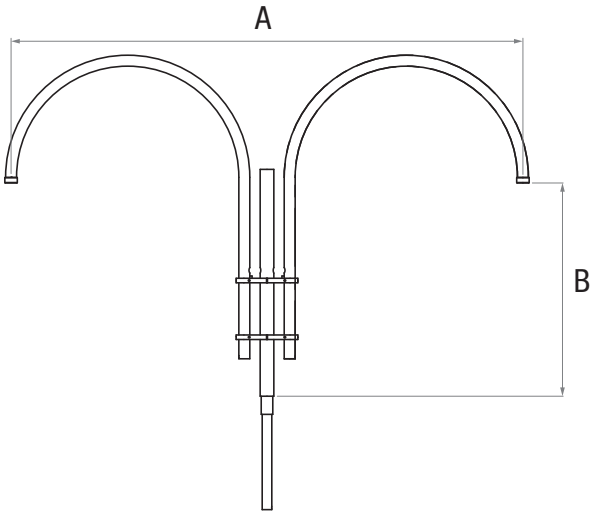


DIMENSIONS (inches)
wall/surface mounting
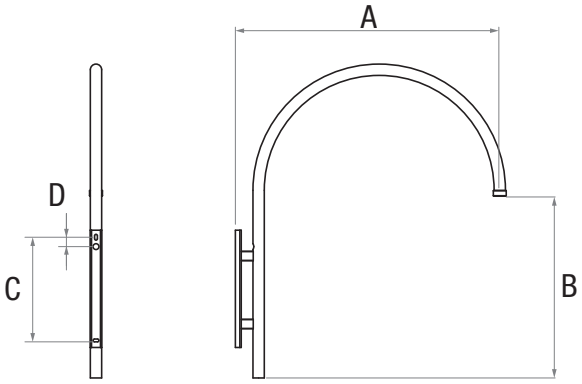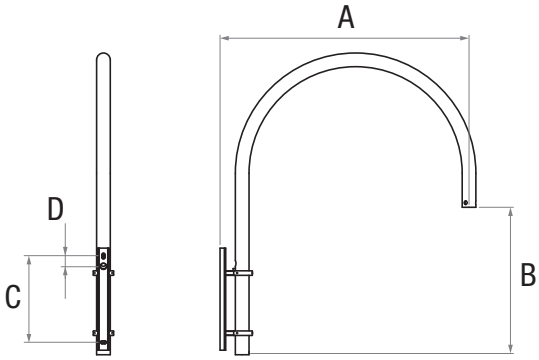
| | wall/ surface mounting | | | | wall/ surface mounting | | | |
|---|---|---|---|---|---|---|---|---|
| | A | B | C | D | A | B | C | D |
| **ST ANDRÉ 70** | 28" | 31" | 17" | 2" | 31" | 26" | 15" | 2" |
| **ST ANDRÉ 100** | 40" | 31" | 17" | 2" | 43" | 26" | 15" | 2" |